Digital Timers/Counters/Tachometers

Part Number	Input Voltage	Description
CTA4000A	100–240VAC	Output 1: Transistor/Relay comb. Output 2: Transistor
CTA4000D	24VDC	Output 1: Transistor/Relay comb. Output 2: Transistor
CTA4100A	100–240VAC	Output 1: Transistor/Relay comb. Output 2: Relay
CTA4100D	24VDC	Output 1: Transistor/Relay comb. Output 2: Relay

3-in-1 Timer/ Counter/Tachometer

- Operates as timer, counter, or tachometer
- 2 line x 6 digit LCD display
- Dry contact or NPN/PNP input selectable
- Dual outputs available in two configurations
- +12VDC (100mA) output for encoder or sensor power
- 12 function timer includes:
  On Delay, Off Delay, Signal On,
  Power On Delay, Repeat Cycle, Cumulative, On/Off Cycle
- Counting modes include:
  1-stage, 2-stage, batch, dual counting,
  and totalizing
- Maximum count speed 5K cps
- Timer + Counter mixed mode function
- Tachometer measures frequency
- "Reset" and "Lock" keys
- External Start and Reset capability

Wiring

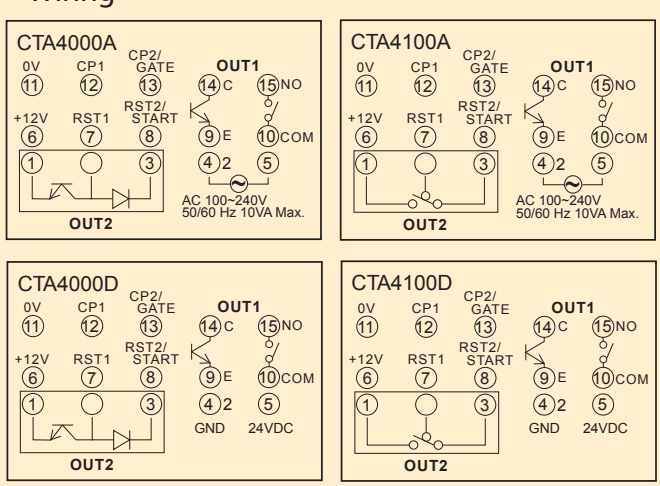

General Specifications

Input Voltage	100–240VAC, 50/60Hz	24VDC ±10%
Input voltage range	85% to 110%, rated voltage	21.6 to 26.4VDC
Power consumption	Less than 10VA	Less than 5W
External power supply	12VDC ±10%, 100mA	
Display	Double-line, 6-digit LCD display	
Input signal	Non-voltage input (NPN): ON impedance 1K ohm max. ON residual voltage: 2V max. Voltage input (PNP): High level: 4.5 to 30VDC, Low level: 0 to 2VDC	
Output 1 (Transistor and Relay)	Relay: SPST max.250VAC, 5A (resistance load) Transistor: NPN open collector. When 100mA/30VDC, residual voltage = 1.5VDC max.	
Output 2 (Transistor or Relay)	Relay: SPDT max.250VAC, 5A (resistance load) Transistor: NPN open collector. When 100mA/30VDC, residual voltage = 1.5VDC max.	
Dielectric strength	2000VAC 50/60 Hz for 1 minute	
Vibration resistance	Without damage: 10–55Hz, amplitude = 0.75mm, 3 axes for 2 hours	
Shock resistance	Without damage: drop 4 times, 300m/s2, 3 edges, 6 surfaces and 1 corner	
Ambient temperature	0°C to +50°C	
Storage temperature	-20°C to +65°C	
Altitude	2000m or less	
Ambient humidity	35% to 85% RH (non-condensing)	
Pollution degree	Degree 2	
Environmental Protection	IP65 on front panel	

Dimensions

Overall			Cutout	
A	**B**	**C**	**A**	**B**
48.0 mm (1.89")	48.0 mm (1.89")	85.8 mm (3.38")	44.8 mm (1.76")	44.8 mm (1.76")

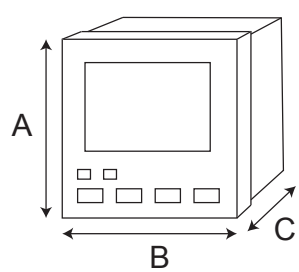

Secure online ordering 24/7/365 from

B&B electronics MANUFACTURING COMPANY

International Headquarters: 707 Dayton Road - PO Box 1040 - Ottawa, IL 61350 USA
815-433-5100 Fax 815-433-5104 *www.bb-elec.com orders@bb-elec.com support@bb-elec.com*

European Headquarters: Westlink Commercial Park - Oranmore Co. Galway - Ireland
+353 91 792444 Fax +353 91 792445 *www.bb-europe.com orders@bb-europe.com support@bb-europe.com*